NO	DESCRIPTION	MATERIAL	Q'TY	FINISH	REMARK
1	BODY 1	BRASS	1	GOLD	B-SMA0043-G
2	GASKET	SI RUBBER	1	RUBBER	RU-0008
3	INSULATION	TEFLON	1	TEFLON	I-0133T
4	WASHER	PH. BRONZE	1	GOLD	W-0012
5	BODY 2	BRASS	1	GOLD	B-SMA0094-N
6	PIN	BRASS	1	GOLD	P-SMA0061-G

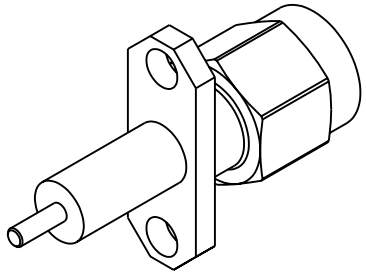

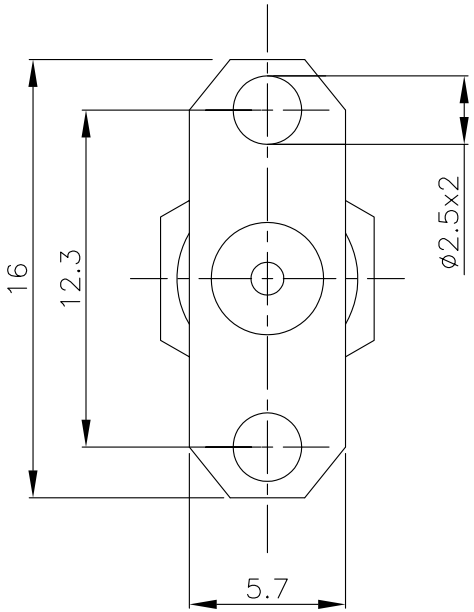

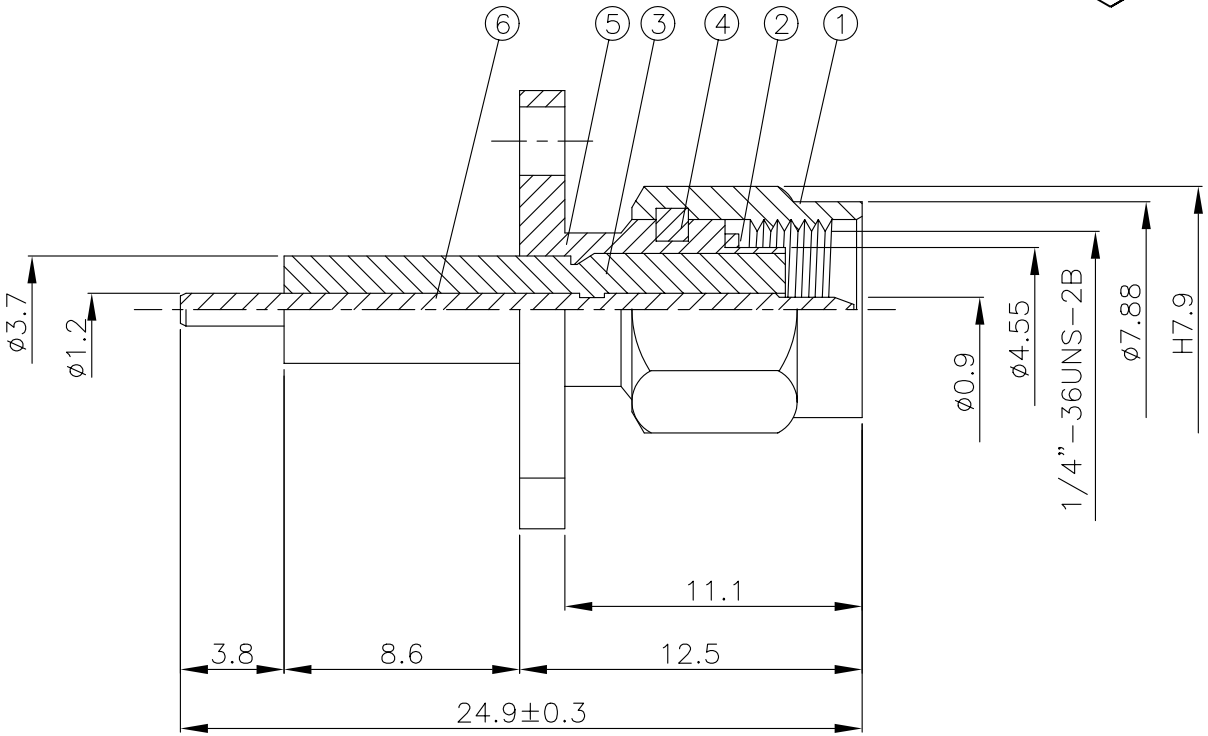

HUS-TSAN GROUP CO., LTD.
P.O. BOX 40-76.TAINAN TAIWAN,R.O.C.

TITLE: SMA FEMALE PANEL RECEPTACLE

PART NO. SMA-06V4-TGG

DRAWING NO. SMA 06V4 TGG

DRAWN	MARY	DATE	96.03.15
CHECKED	黃巧君	DATE	
Q.A.	蘇姿潔	DATE	
APPROVAL	徐燦霖	DATE	
REVISION		DATE	

DIMENSIONS ARE IN MILLMETERS

UNLESS OTHERWISE SPECIFIED TOLERANCES

0.5-5=±0.2 120-315=±1
5-30=±0.4 315-1000=±1.6
30-120=±0.6 1000-2000=±2.4

SCALE 5:1 SIZE A

REVISION	
DESCRIPTION	ENGINEER